Imperial College London

Rate-Splitting Multiple Access for 6G: Principles, Applications, and Opportunities

Bruno Clerckx

Communications and Signal Processing Group
Department of Electrical and Electronic Engineering

Imperial College London

Thanks to my PhD students, postdocs and many collaborators at TU Eindhoven, University Erlangen-Nuremberg, Ruhr University Bochum, TU Braunschweig, University of Bremen, TU Darmstadt, Princeton, HKU, Xidian, NUDT, TU Berlin, Eurecom, UCL, KCL, Edinburgh, Surrey, York, PUC-Rio, Pusan, Southeast, Samsung, Huawei,...

WTC online seminar 2020

Outline

Outline

The Building Block: MISO Broadcast Channel

Imperial College London

- Number of transmit antenna: N_t
- Number of user: K
- Perfect CSIR: $\mathbf{H} = [\mathbf{h}_1, \ldots, \mathbf{h}_K]$
- Imperfect CSIT: channel estimates $\widehat{\mathbf{H}} = [\widehat{\mathbf{h}}_1, \ldots, \widehat{\mathbf{h}}_K]$ are obtained from feedback (in FDD) or UL training (in TDD).

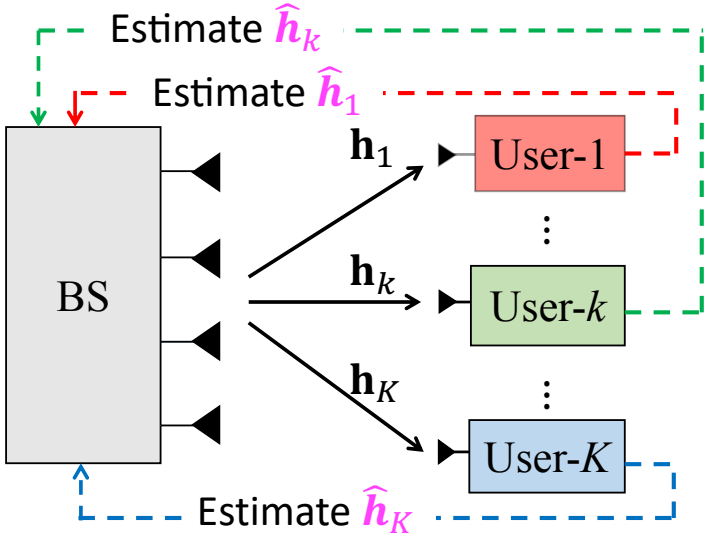

Optimal Strategy:

- Perfect CSIT: DPC
- Imperfect CSIT: Unknown

Figure: K-user MISO system with CSIT acquisition.

Conventional Architecture (4G and 5G)

Multi-User Linear Precoding (MU–LP):

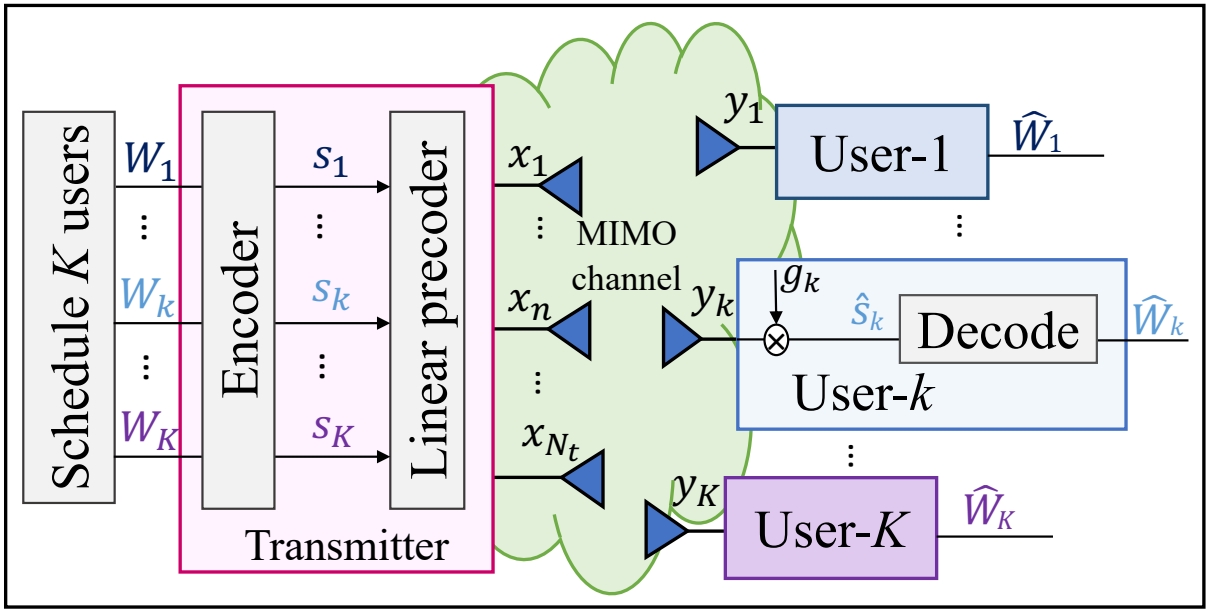

Treat residual interference as noise.

From K messages, we create K streams.

Significant loss if multi-user interference is not within noise level.

Other Architecture (5G)

Non-Orthogonal Multiple Access (NOMA):

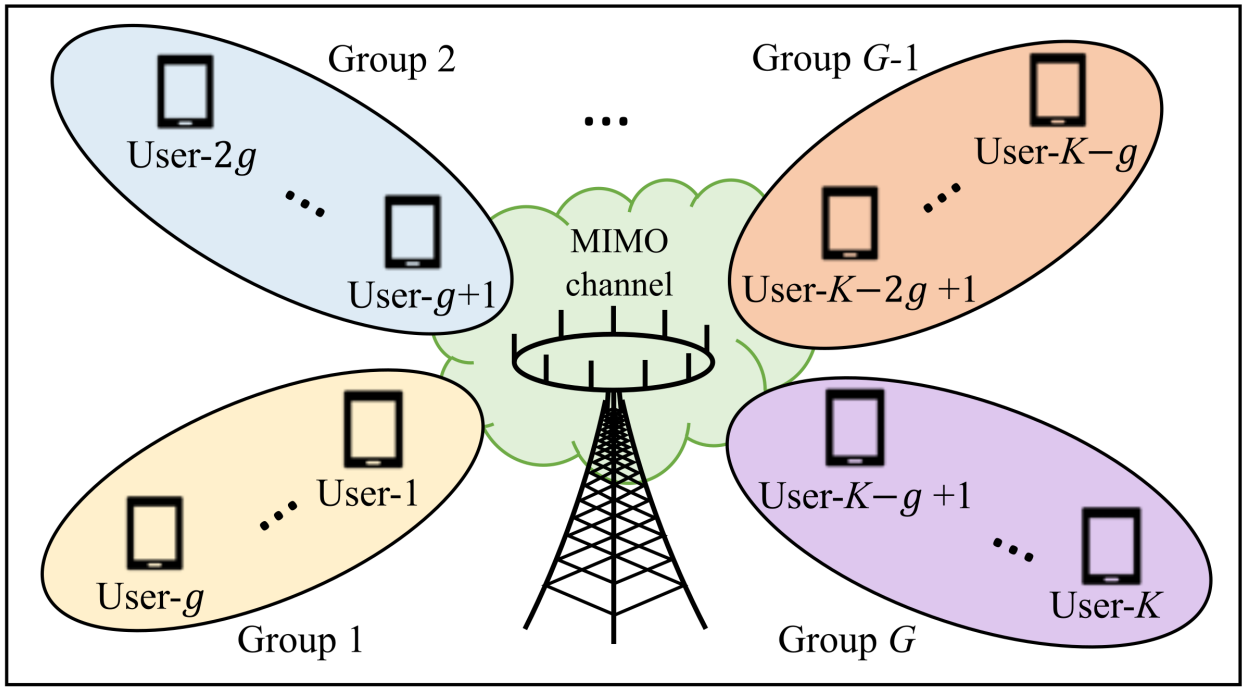

One user fully decodes the messages of other users.

From K messages, we create K streams.

Careful of the inefficient use of multi-antenna and SIC receivers!

Rate-Splitting Multiple Access (1-layer RS)

Imperial College London

Split message W_k into two parts: **common** $W_{c,k}$ and **private** $W_{p,k}$.

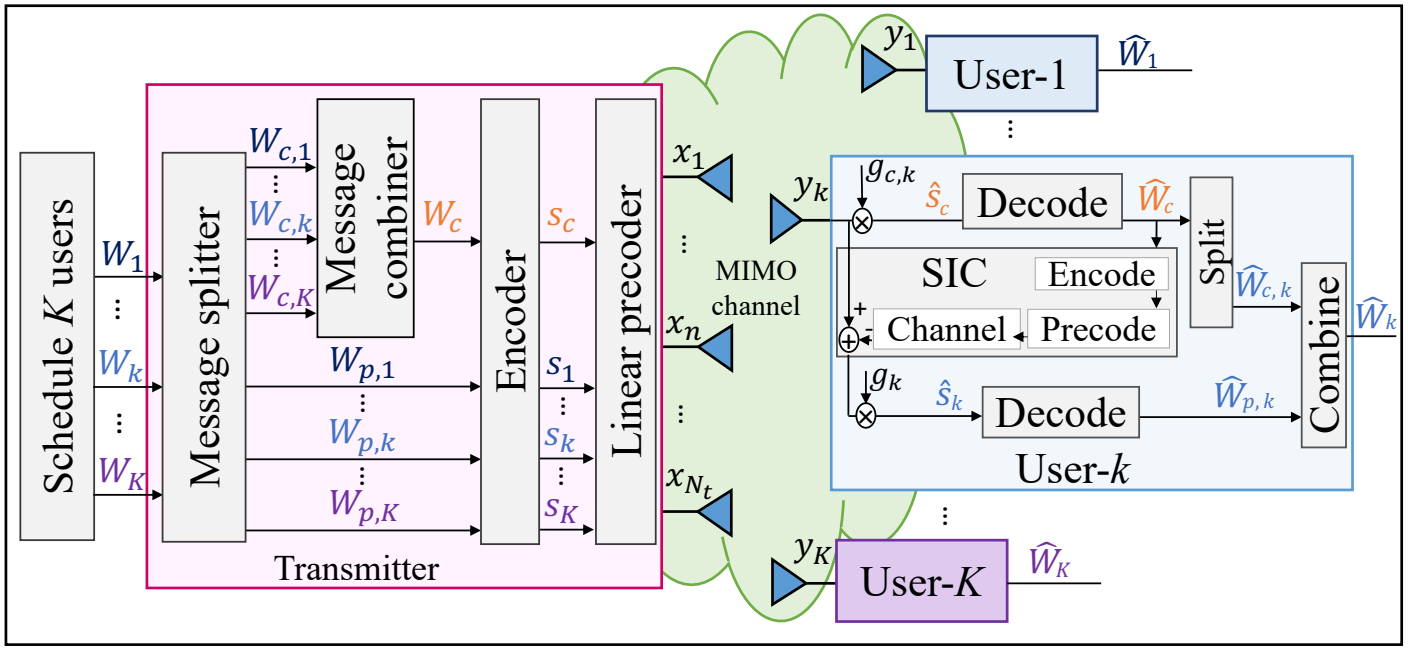

Rate of user-k has been **split**: rate of s_k + part of the rate of s_c

Users decode parts of the messages of other users and treat other parts as noise.

From K messages, we create $K+1$ streams.

All users decode s_c first, before decoding s_k (for user k)

Adjust power allocated to s_c such that multi-user interference is within noise level.

Degrees-of-Freedom (DoF) - Multiplexing Gains

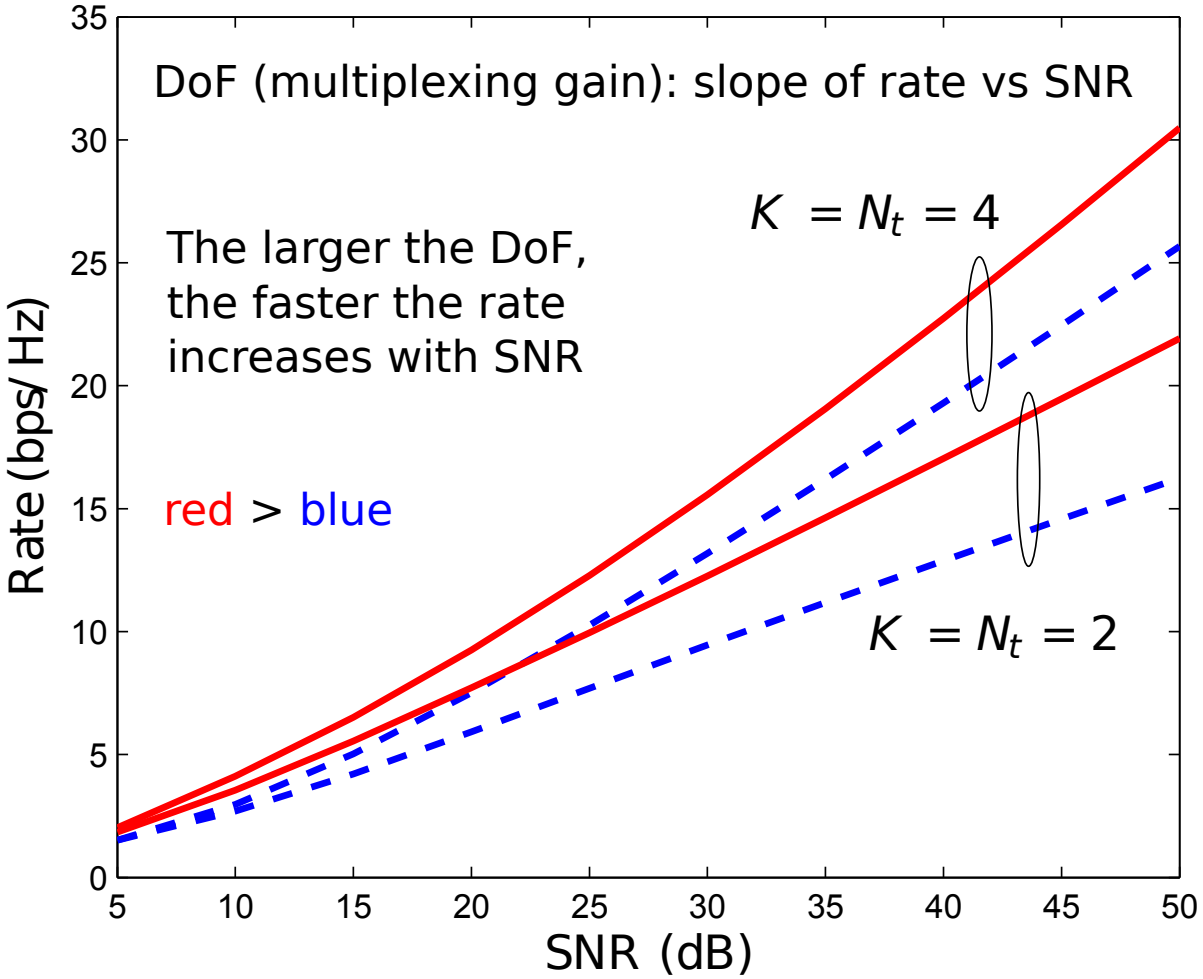

Rate: sum-rate $\sum_k R_k$, weighted sum-rate $\sum_k u_k R_k$, min rate $\min_k R_k$,...

Multiplexing Gain vs Number of SIC Layers

Imperial College London

$K = 6$, $N_t = 4$ for perfect CSIT (left) and imperfect CSIT (right)

- Sum multiplexing gain d_{s}: $\sum_k R_k \approx d_{\mathsf{s}} \log_2(P) + \text{const.}$
- MMF multiplexing gain d_{mmf}: $\min_k R_k \approx d_{\mathsf{mmf}} \log_2(P) + \text{const.}$

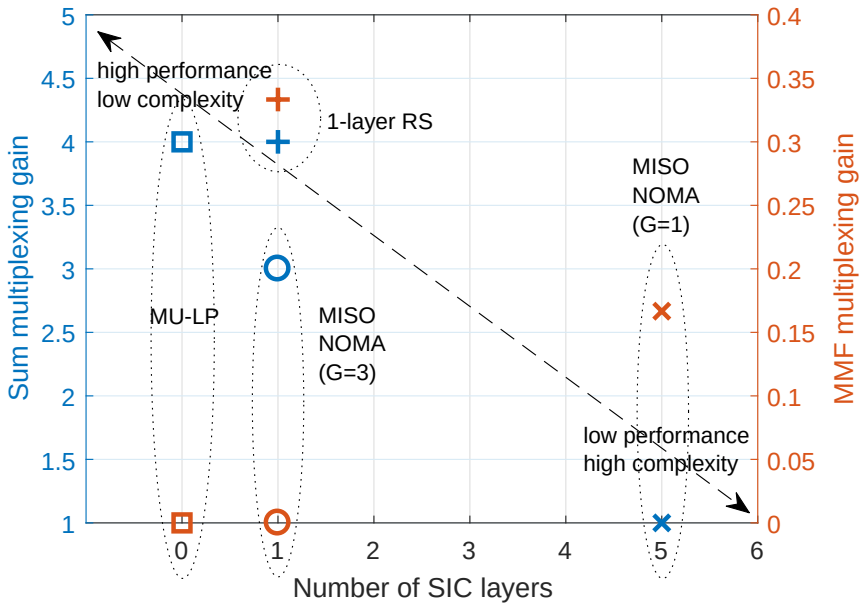

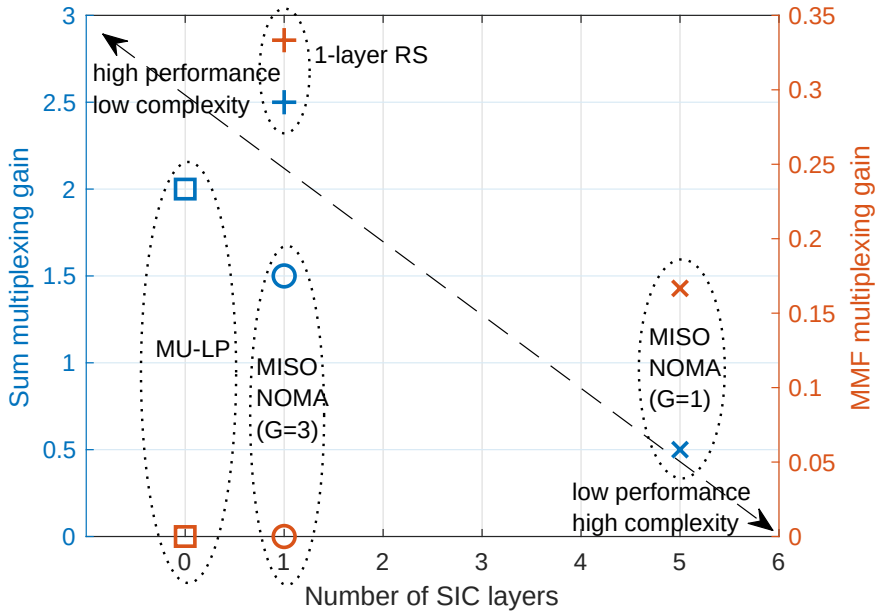

1-layer RS achieves larger sum/MMF multiplexing gains than MU-LP and NOMA with a single layer of SIC!

Sum-Rate Enhancement

Imperial College London

Sum-rate: $N_t = K = 2$, $N_t = K = 4$, imperfect CSIT ($\sigma_e^2 = P^{-0.5}$)

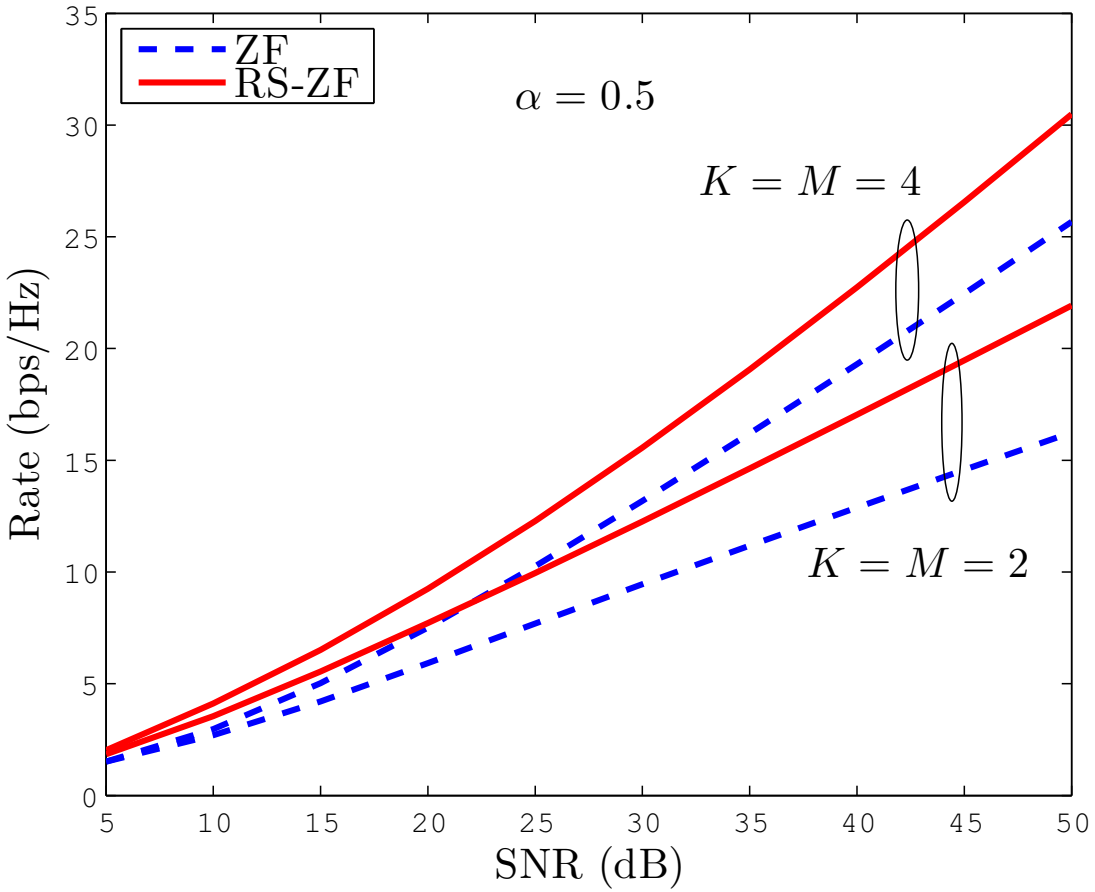

Slope increases → Rate increases! Cannot reach any better slope!

Rate Fairness Enhancement

Imperial College London

MMF rate: $K = 6$, $N_t = 4$, perfect CSIT (left) and imperfect CSIT (right)

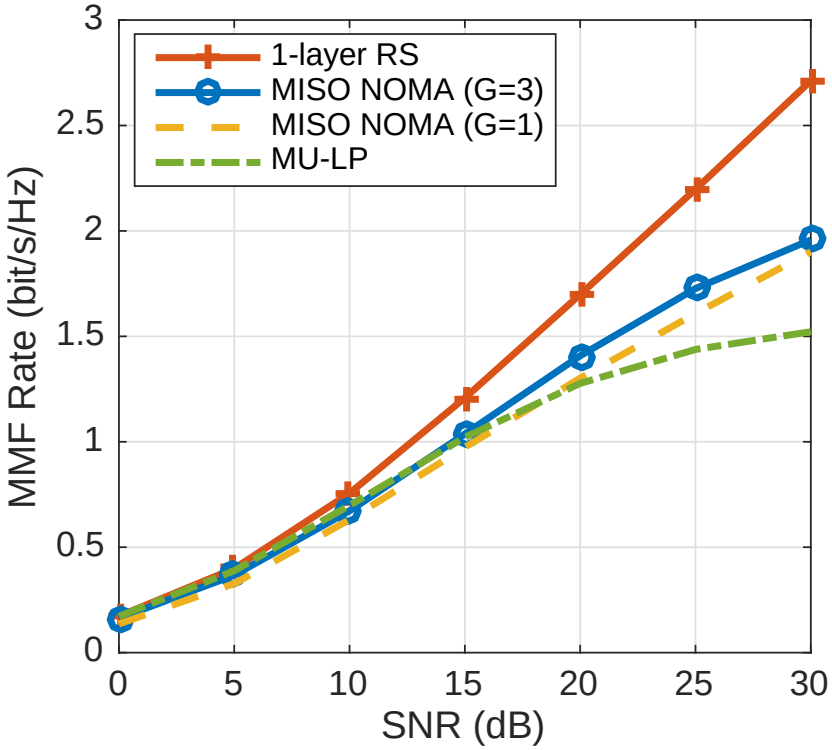

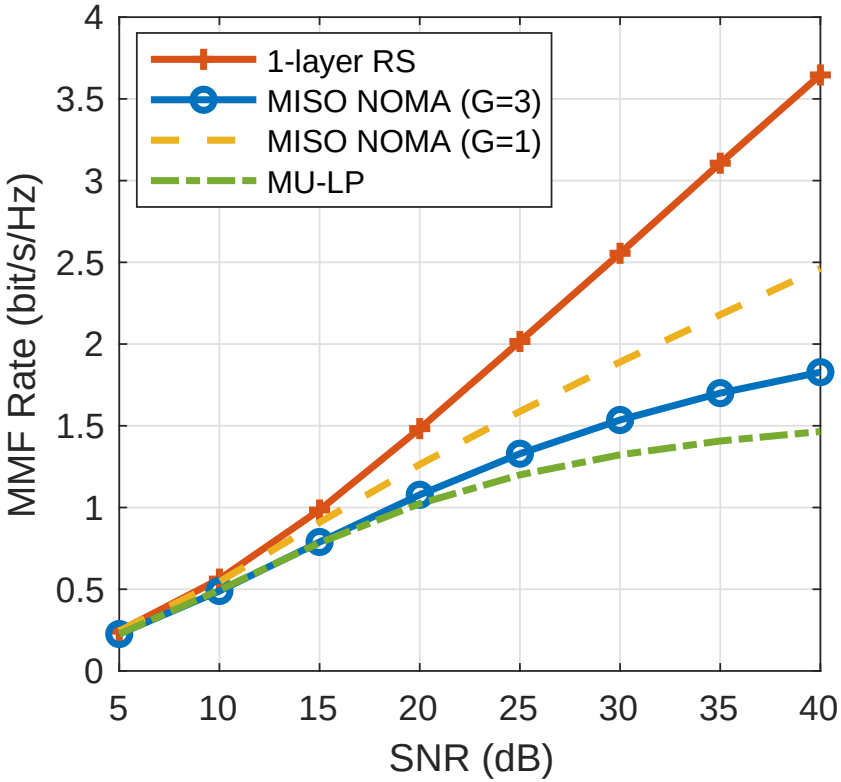

Huge gains with 1-layer RS: rate, fairness and robustness enhancements with only 1 SIC!

Rate Region Enhancement

Imperial College London

Ergodic rate regions: $N_t = K = 2$, imperfect CSIT ($\sigma_e^2 = P^{-0.6}$)

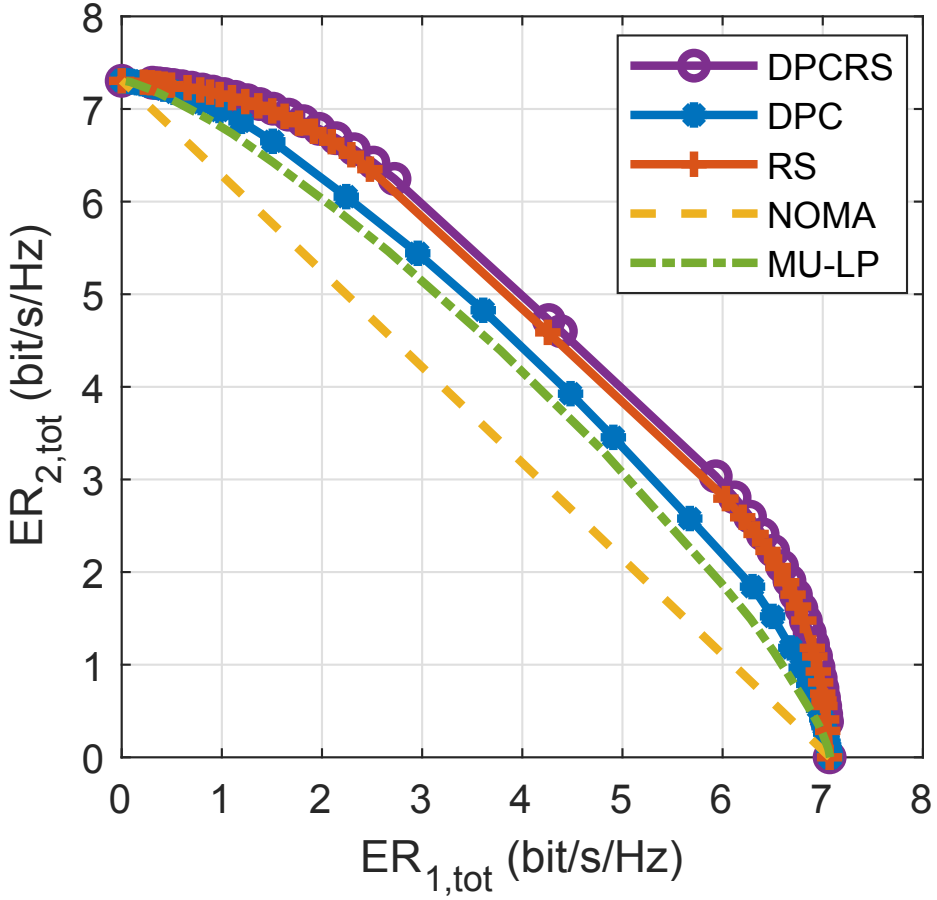

RS schemes outperform MU-LP, NOMA and DPC!

Information Theoretic Optimality

Information theoretic channel (e.g. MISO BC)

↓

Information theoretic limits (Capacity region)

↓

Communication scheme (e.g. DPC)

↓

Signal processing (Precoder optimization)

↓

Imperfect CSIT (Robust optimization)

Information theoretic channel (e.g. MISO BC with Imperfect CSIT)

↓

Information theoretic limits (Capacity region - unkown)

↓

Alternative information theoretic limits (DoF region)

↓

Communication scheme (Based on Rate-Splitting)

↓

Signal processing (Precoder optimization)

$$\mathbf{x} = \sum_{k=1}^{K} \mathbf{p}_k s_k$$

4G/5G approach

BUT perfect CSIT to start with!

$$\mathbf{x} = \mathbf{p}_c s_c + \sum_{k=1}^{K} \mathbf{p}_k s_k$$

Rate-Splitting approach

Optimal in a DoF (region) sense!

A General and Flexible Multiple Access

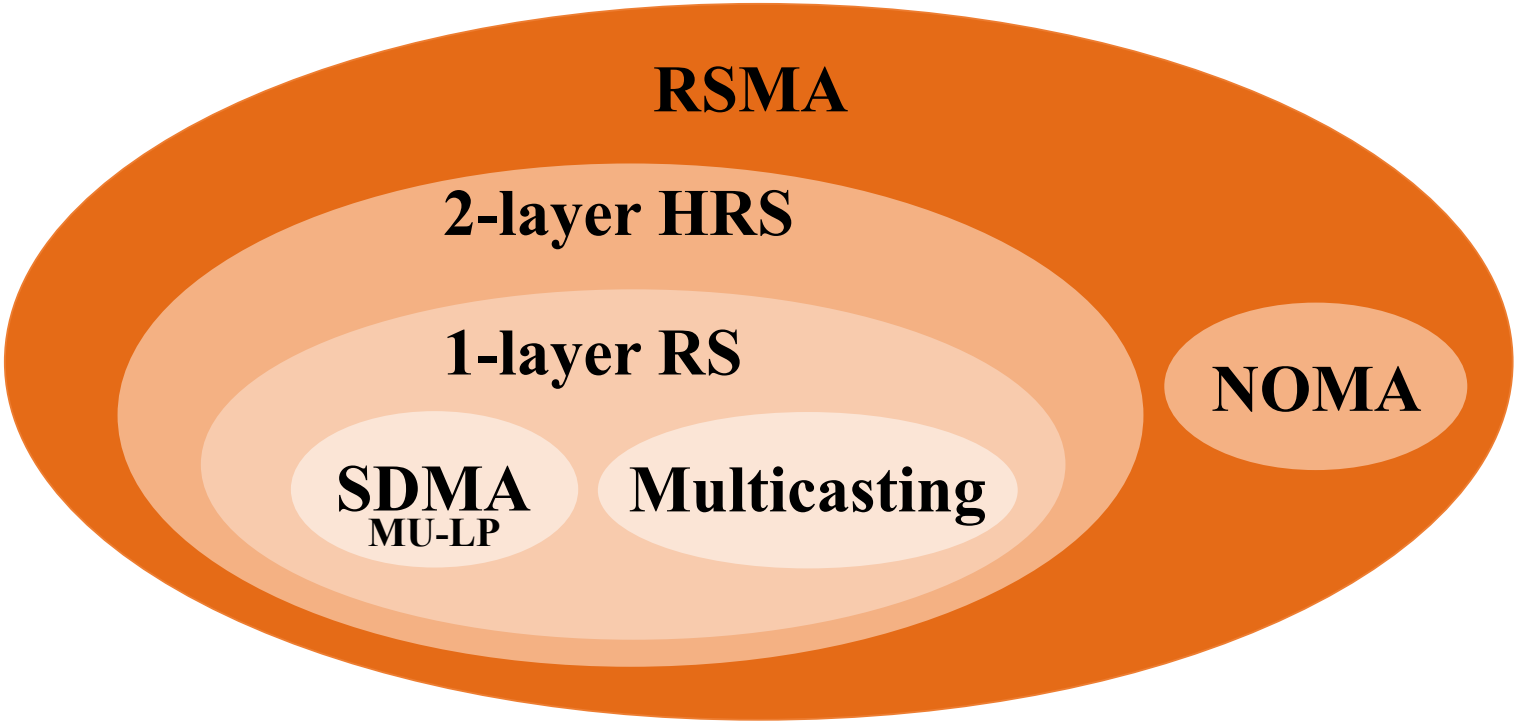

partially decode interference and partially treat interference as noise

Two-user MU-LP and NOMA: subsets of RSMA

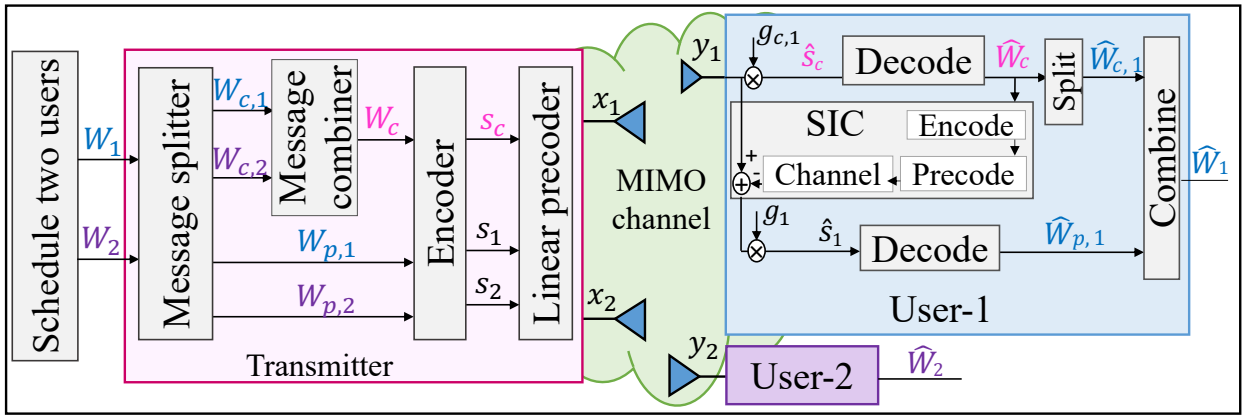

SDMA based on MU–LP

- Simply allocate no power to s_c and treat multi-user interference as noise $\mathbf{x} = \mathbf{p}_1 s_1 + \mathbf{p}_2 s_2$

NOMA based on SC–SIC

- Forcing user-1 to fully decode the message of user-2
- Allocate no power to s_2, encode W_1 into s_1 and encode W_2 into s_c $\mathbf{x} = \mathbf{p}_c s_c + \mathbf{p}_1 s_1$

Mapping of Messages to Streams in RS

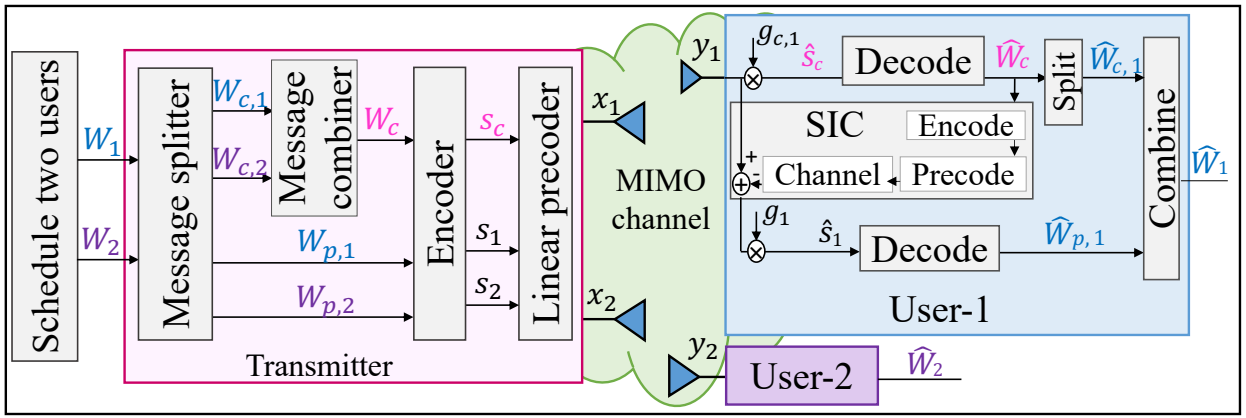

	s_1	s_2	s_c
SDMA	W_1	W_2	-
NOMA	W_1	-	W_2
OMA	W_1	-	-
Multicasting	-	-	W_1 , W_2
RS	$W_{p,1}$	$W_{p,2}$	$W_{c,1}$, $W_{c,2}$

decoded by its intended user and treated as noise by the other user

decoded by both users

General framework: RS $\supset$ SDMA/OMA/NOMA/Multicast.

Rate-Splitting Example

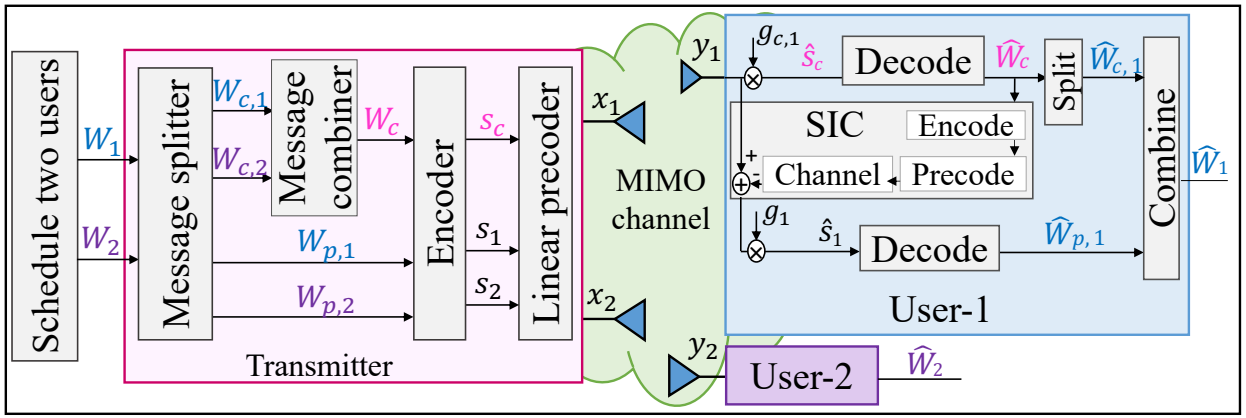

User-1

- $W_1 = (a_1\ a_2\ a_3\ a_4) \in \mathcal{W}_1 = \{0000, 0001, 0010, \ldots, 1111\}$, $|\mathcal{W}_1| = 16$

User-2

- $W_2 = (b_1\ b_2\ b_3) \in \mathcal{W}_2 = \{000, 001, 010, \ldots, 111\}$, $|\mathcal{W}_2| = 8$

Message split for User-1

- $W_{\mathrm{c},1} = (a_1\ a_2)$, $W_{\mathrm{p},1} = (a_3\ a_4)$

Message split for User-2

- $W_{\mathrm{c},2} = (b_1)$, $W_{\mathrm{p},2} = (b_2\ b_3)$

Common message

- $W_{\mathrm{c}} = (W_{\mathrm{c},1}\ W_{\mathrm{c},2}) = (a_1\ a_2\ b_1)$

Transmitter and receiver structures

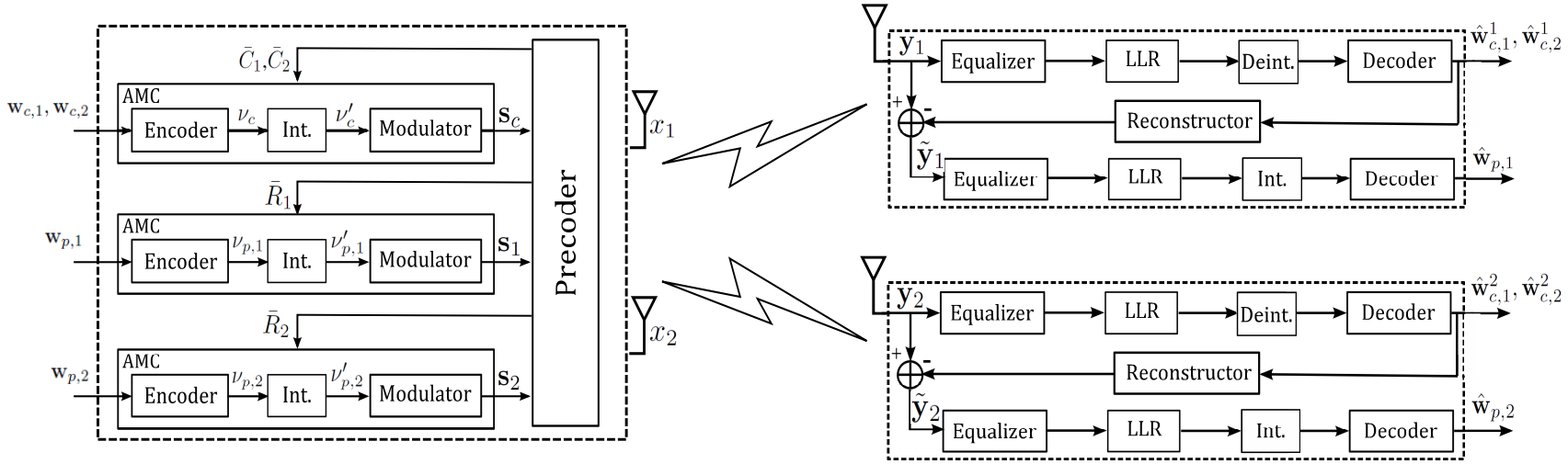

PHY layer design: message split, channel coding (polar codes) for common and private streams, interleaver, finite constellation modulation (4-QAM, 16-QAM, 64-QAM and 256-QAM), precoder optimization, adaptive modulation and coding, decoder and SIC receiver (incorporating error propagation)

Imperial College London

Throughput: $K = 2$, $N_t = 2$, imperfect CSIT ($\sigma_e^2 = P^{-0.6}$)

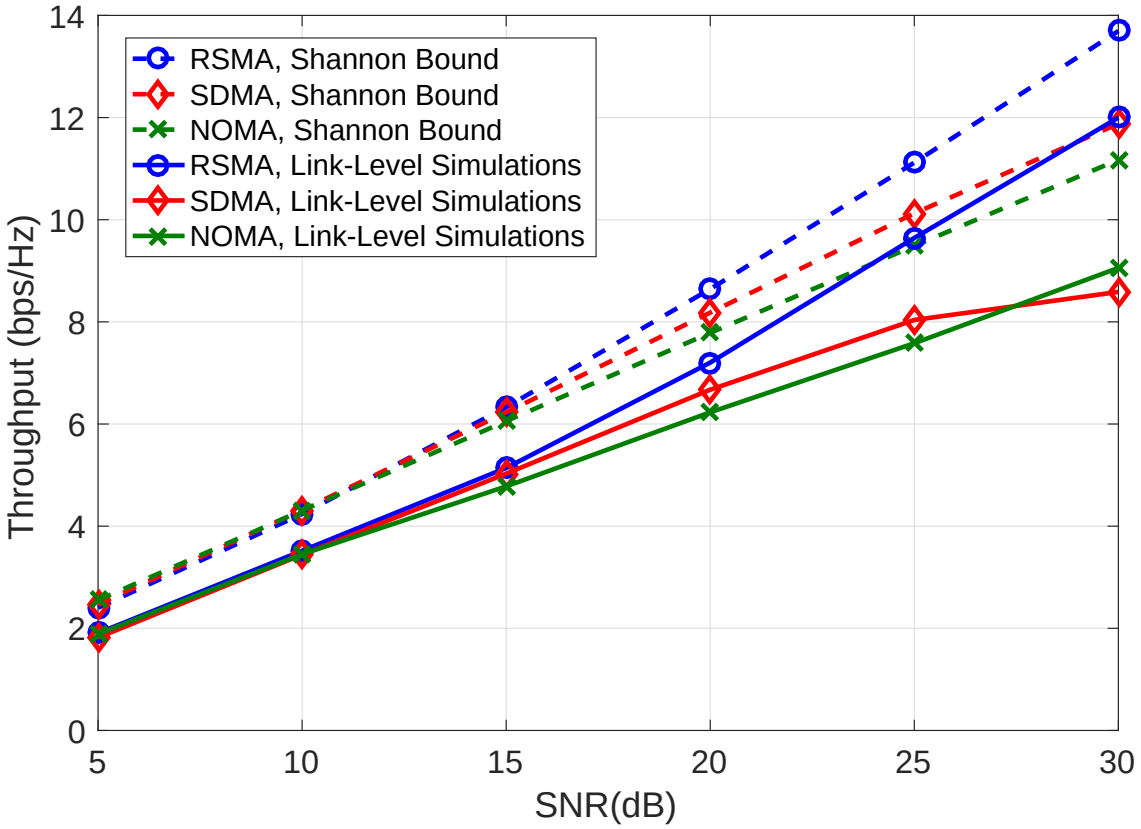

RSMA more robust and significantly outperforms SDMA and NOMA

Other RSMA schemes: Dirty Paper Coded RS

Beyond 1-layer RS: combination of RS and DPC into DPC-RS

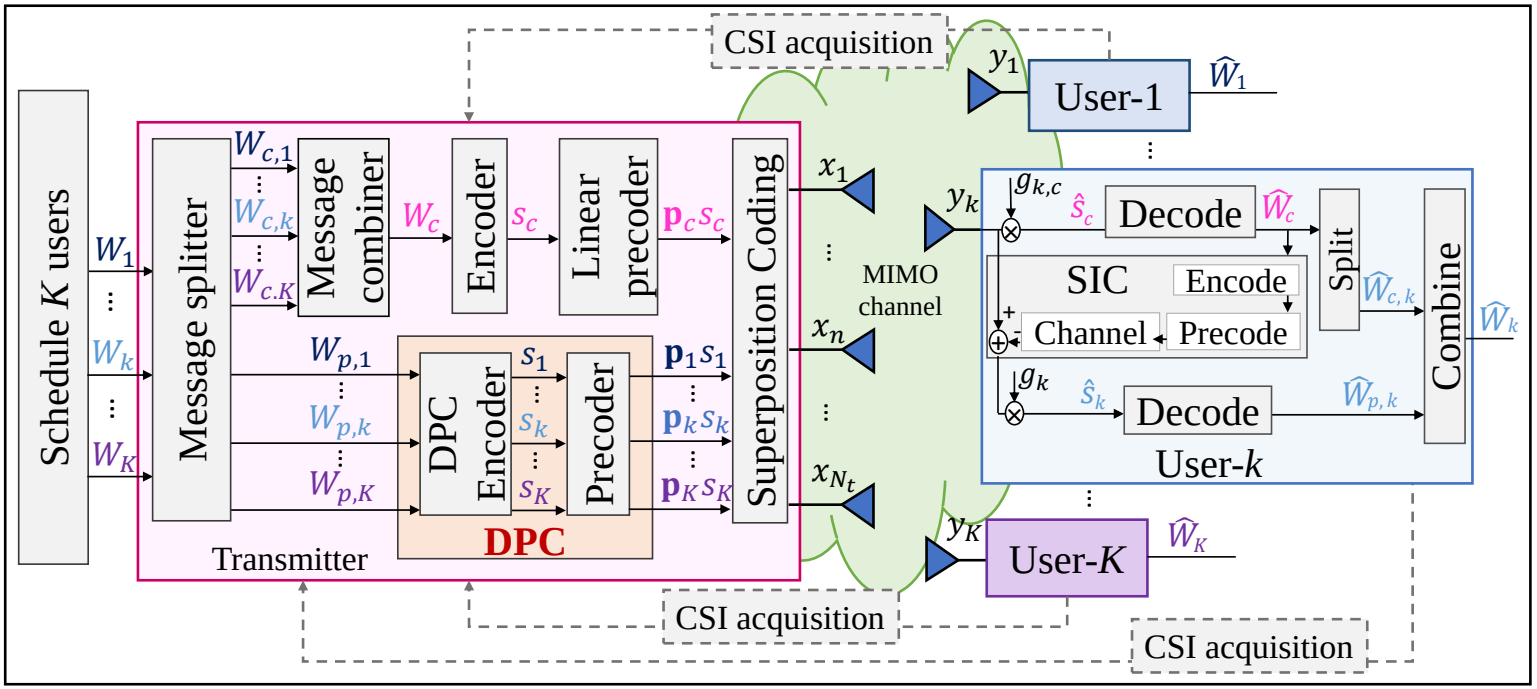

Encode private parts using DPC

DPC-RS boils down to DPC if CSIT is perfect. Is DPC-RS capacity achieving in imperfect CSIT?

Other RSMA schemes: Multi-Layer RS

Beyond 1-layer RS: multiple splits of messages and layers of SIC

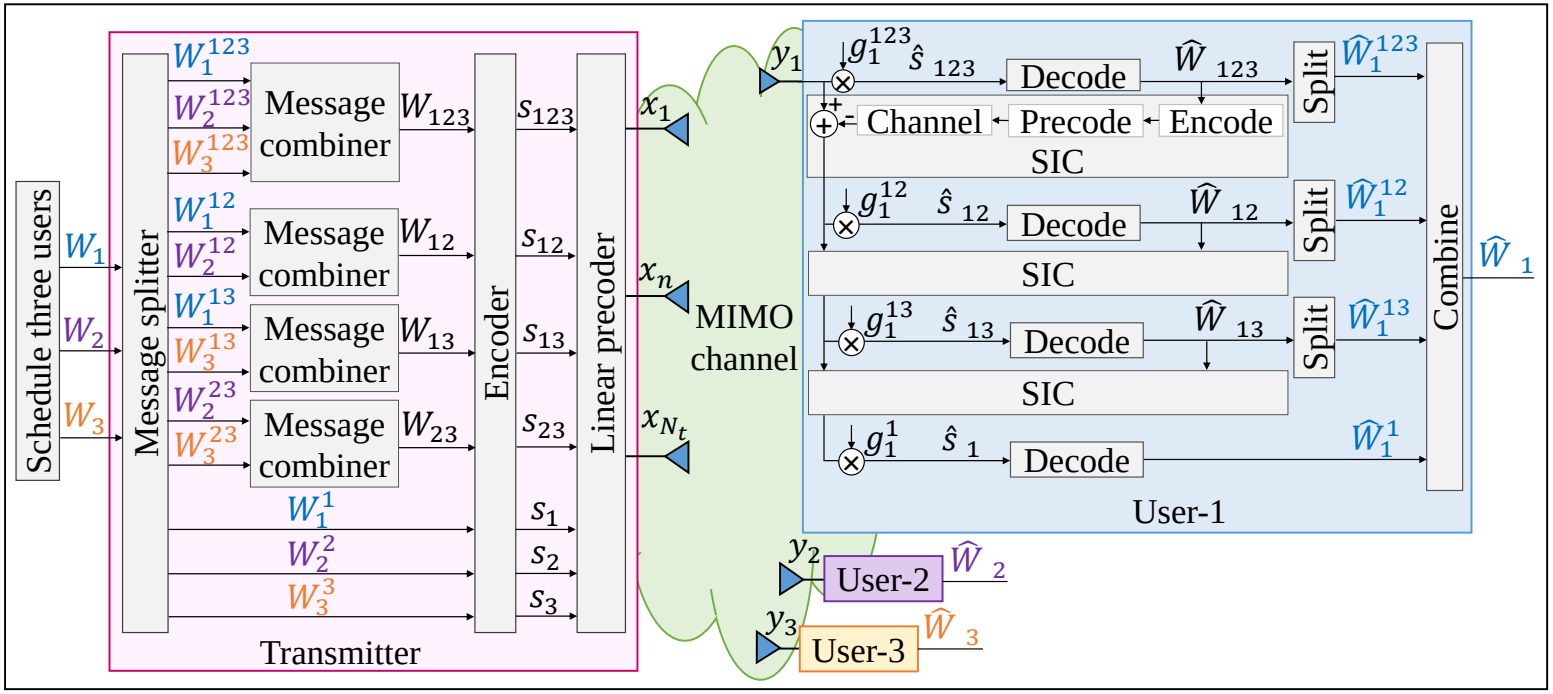

1-layer RS, SDMA/MU-LP and NOMA sub-schemes of RSMA.

Outline

RS Applications

Imperial College London

Interference Channel
[Carleial78], [Han and Kobayashi81]

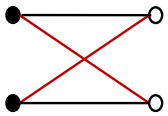

MU-MISO with Partial CSIT
[Yang et al.13], [Hao et al.15] ... etc.

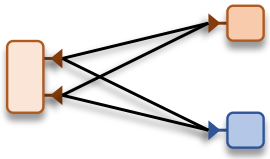

Multi-Cell MISO with partial CSIT [Hao and Clerckx16]

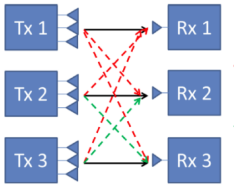

Massive MIMO with partial CSIT [Dai et al.16]

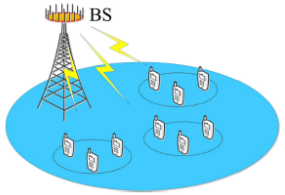

Robust Cache Aided Interference Management [Piovano et al.2017]

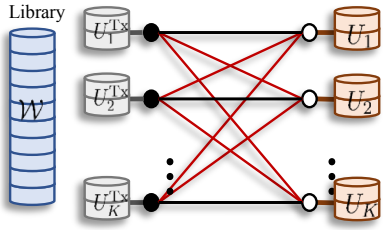

Rate Splitting

and its applications

mmWave with limited feedback [Dai and Clerckx17]

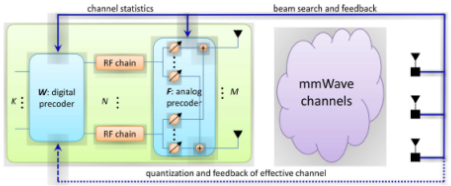

Multigroup Multicasting
[Joudeh and Clerckx17]

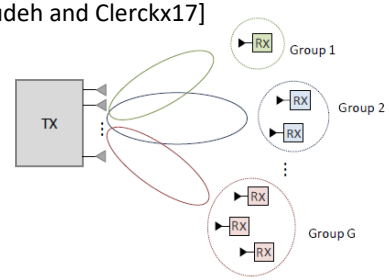

Joint unicast and multicast
[Mao et al.2018]

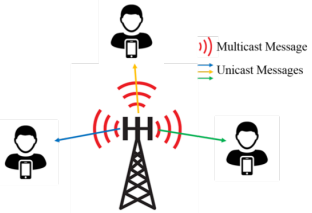

Coordinated Multipoint Joint Transmission
[Mao et al.2018]

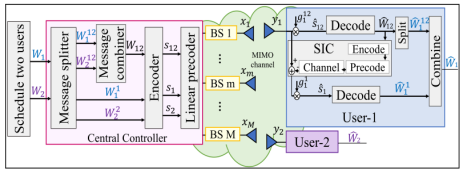

Simultaneous Wireless Information and Power Transfer (SWIPT)
[Mao et al.2019]

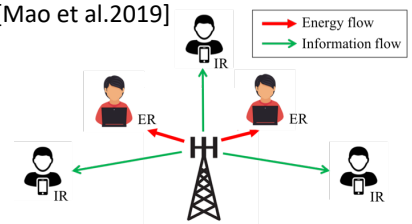

Imperial College London

Weighted sum rate with QoS constraints: $N_t = 2$, $K = 10$, perfect CSIT

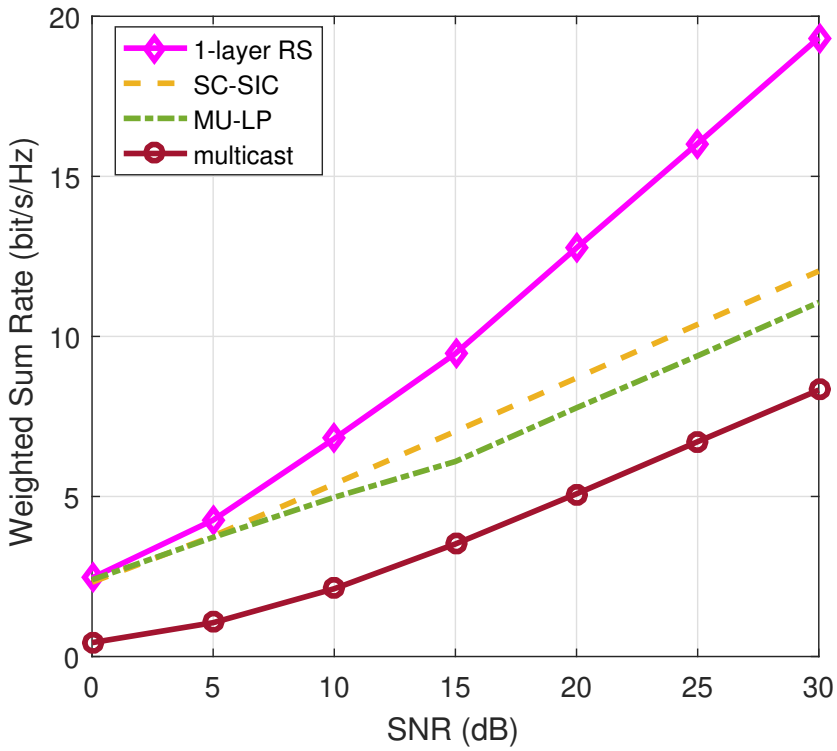

Huge gains with RS (**1 SIC layer**) vs NOMA (**9 SIC layers**!)

General framework: higher rate, QoS, robustness and lower complexity

Mobility in TDD Massive MIMO

Imperial College London

Throughput: $N_t = 32, K = 8$, 10ms CSI feedback delay

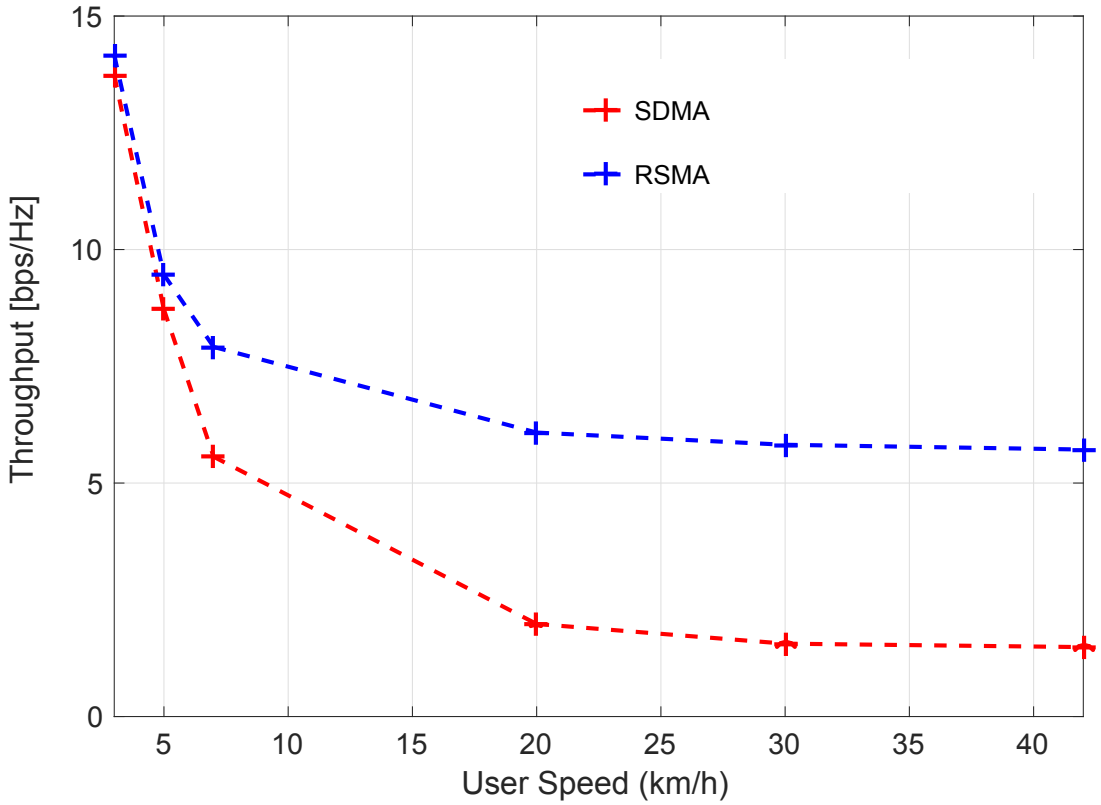

RSMA maintains multiuser connectivity in mobility conditions!

Cloud-Radio Access Network (C-RAN)

Data compression

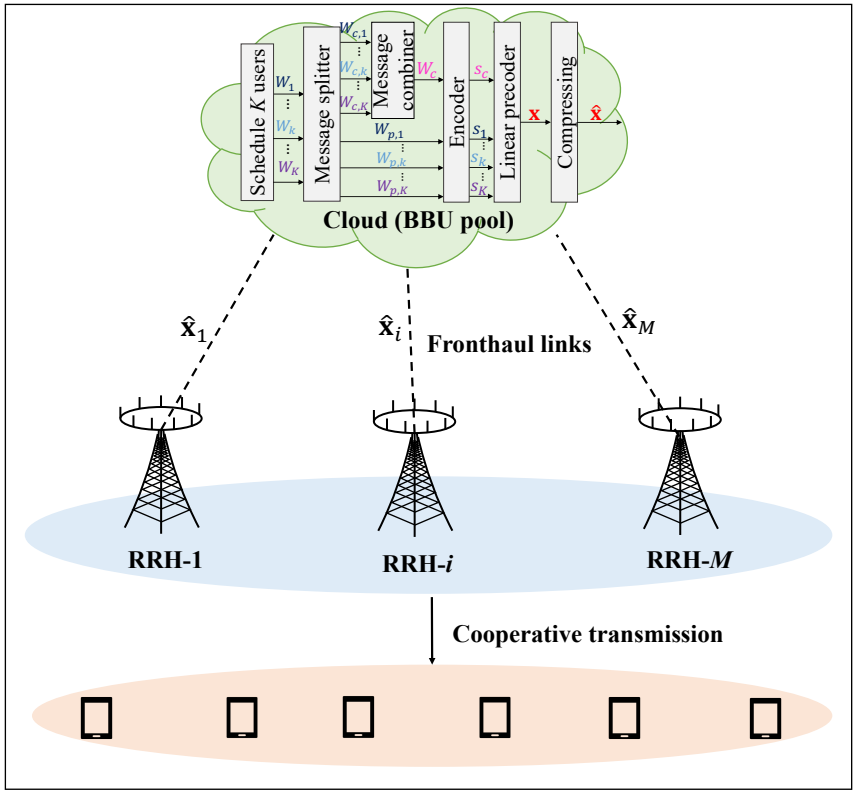

Data sharing

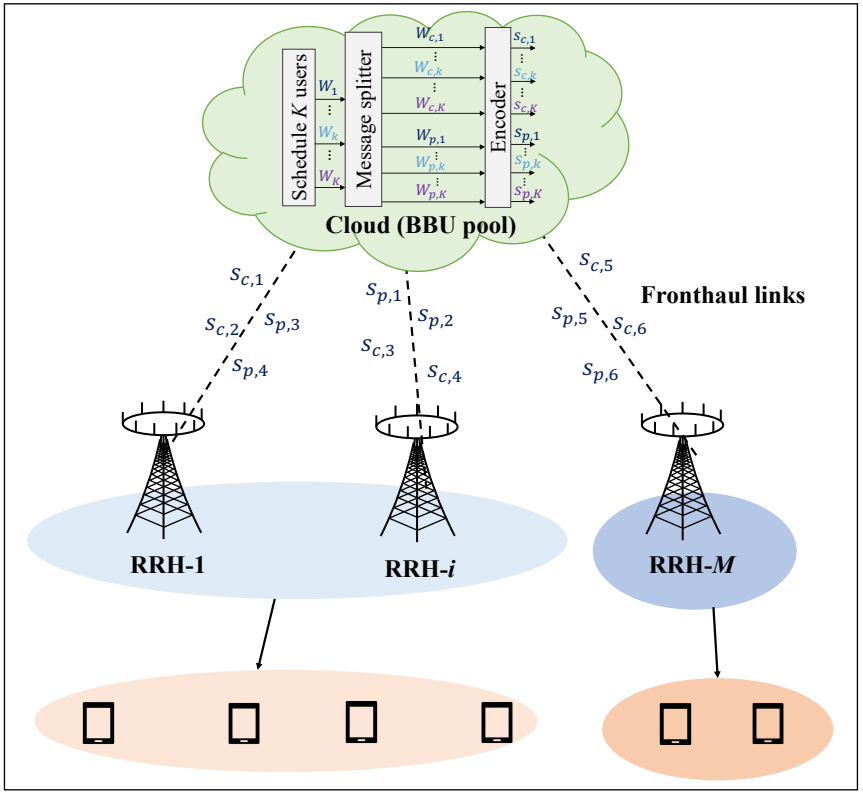

For a given fronthaul capacity constraint, RSMA schemes are more spectrally and energy efficient than SDMA and NOMA.

Cooperative Rate-Splitting: one user forwards its decoded common message to another user

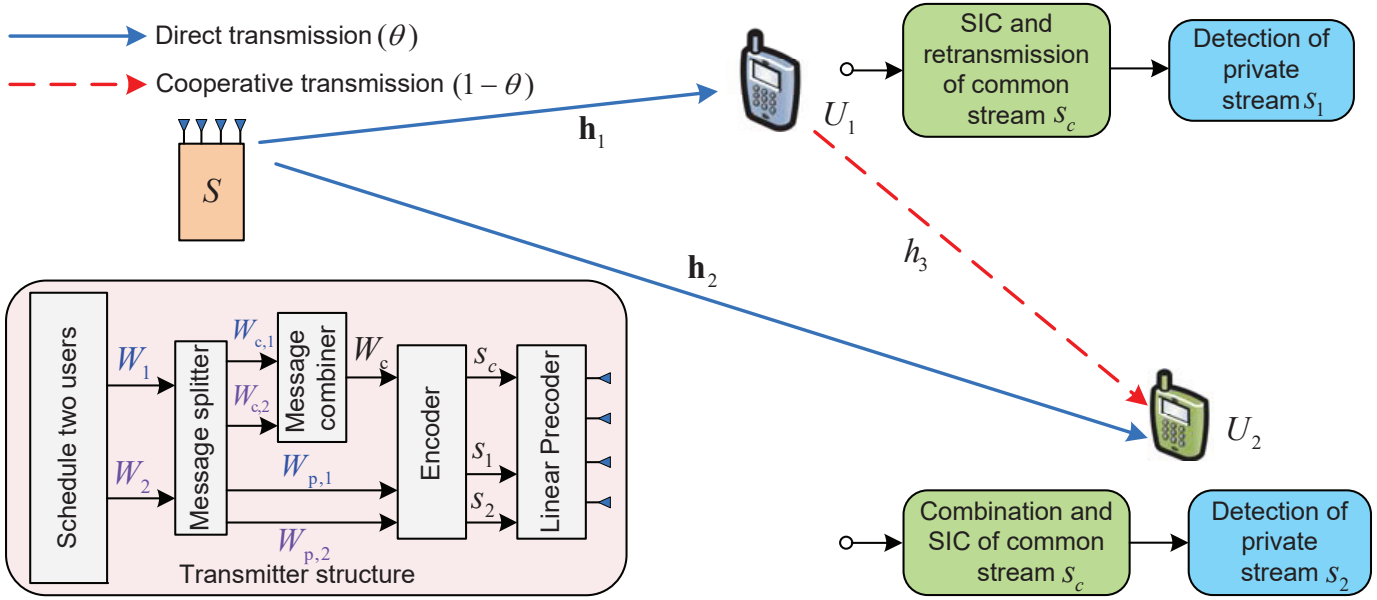

Adjust split and power to common message depending on propagation conditions

Max-min fair rate performance of **multibeam satellite system** versus per-feed available power. 7 beams and 14 users (2 users per beam).

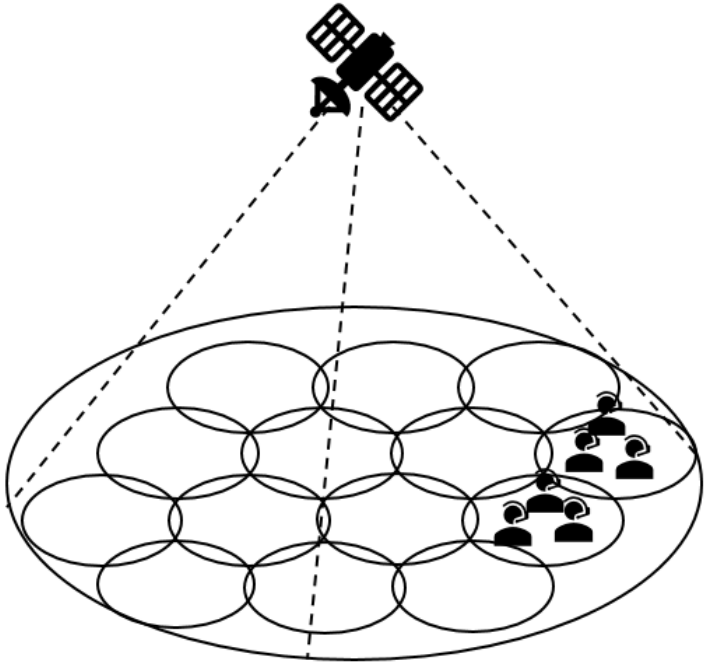

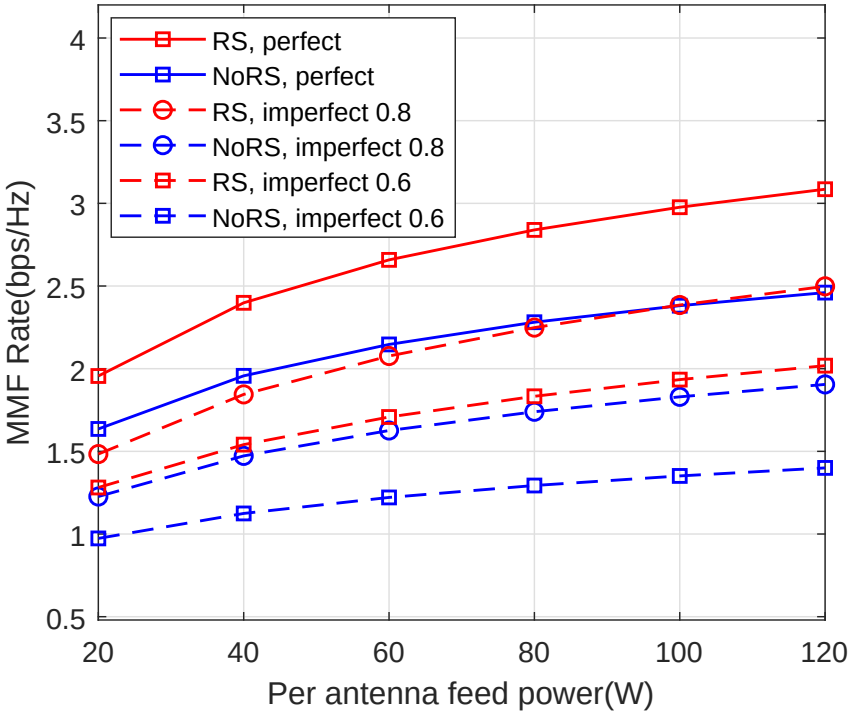

Superiority of RS: manage inter-beam interference, CSIT uncertainty, practical per-feed constraints and overloaded regime

Joint Sensing and Communication

Imperial College London

How to make the **best use of the spectrum** for the dual purpose of **sensing** and **communication**?
Find the strategy that achieves the best tradeoff between WSR and MSE.

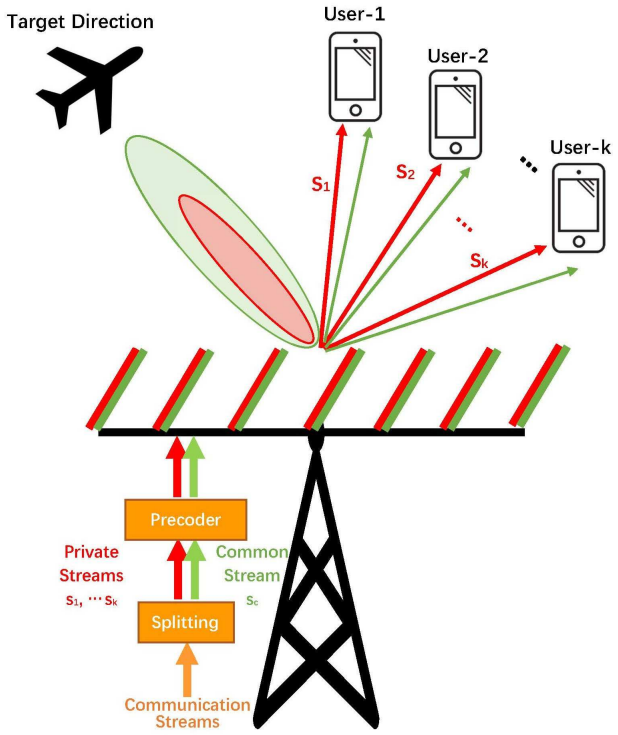

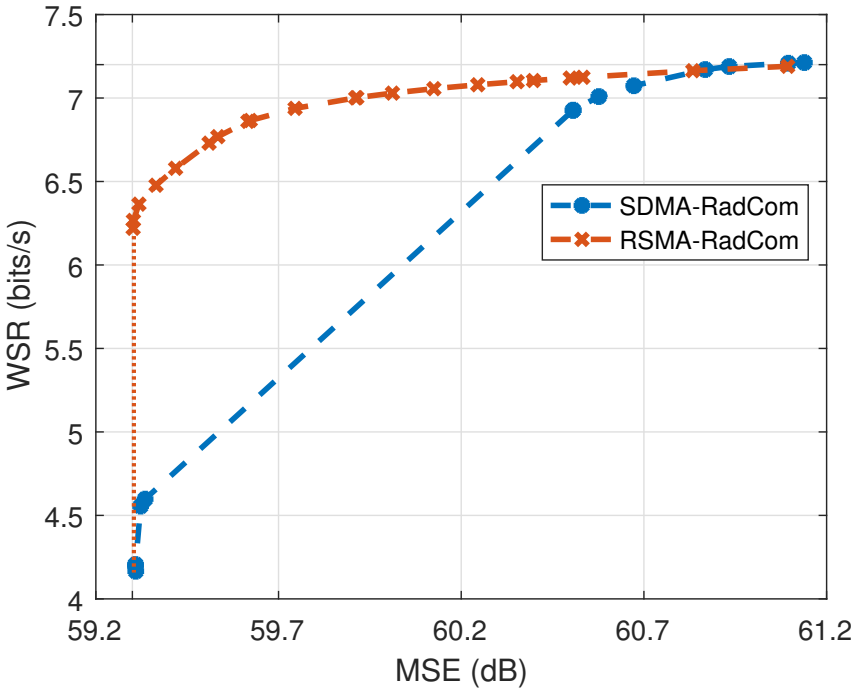

Superiority of RS: efficiently manage radar-communication interference, lead to larger WSR-MSE region

Outline

Opportunities

General Observations of RS/RSMA

- **Partially** decode interference, **partially** treat interference as noise
- **Robust interference management** strategy
- **Flexible non-orthogonal transmission strategy**
- **Powerful enabler of unified multiple access**
- Fundamental changes to PHY and MAC layers

Opportunities

Performance benefits

- Spectral and energy efficiency gains,
- QoS and fairness enhancements,
- Robust to imperfect CSIT,
- Reduce feedback overhead,
- Robust to hardware impairments (phase noise),
- Cope with any user distribution (disparity of channel directions and strengths) and network load (underloaded, overloaded),
- Complexity reduction (compared to NOMA)

Opportunities

Imperial College London

A **gold mine of research problems** for academia and industry:

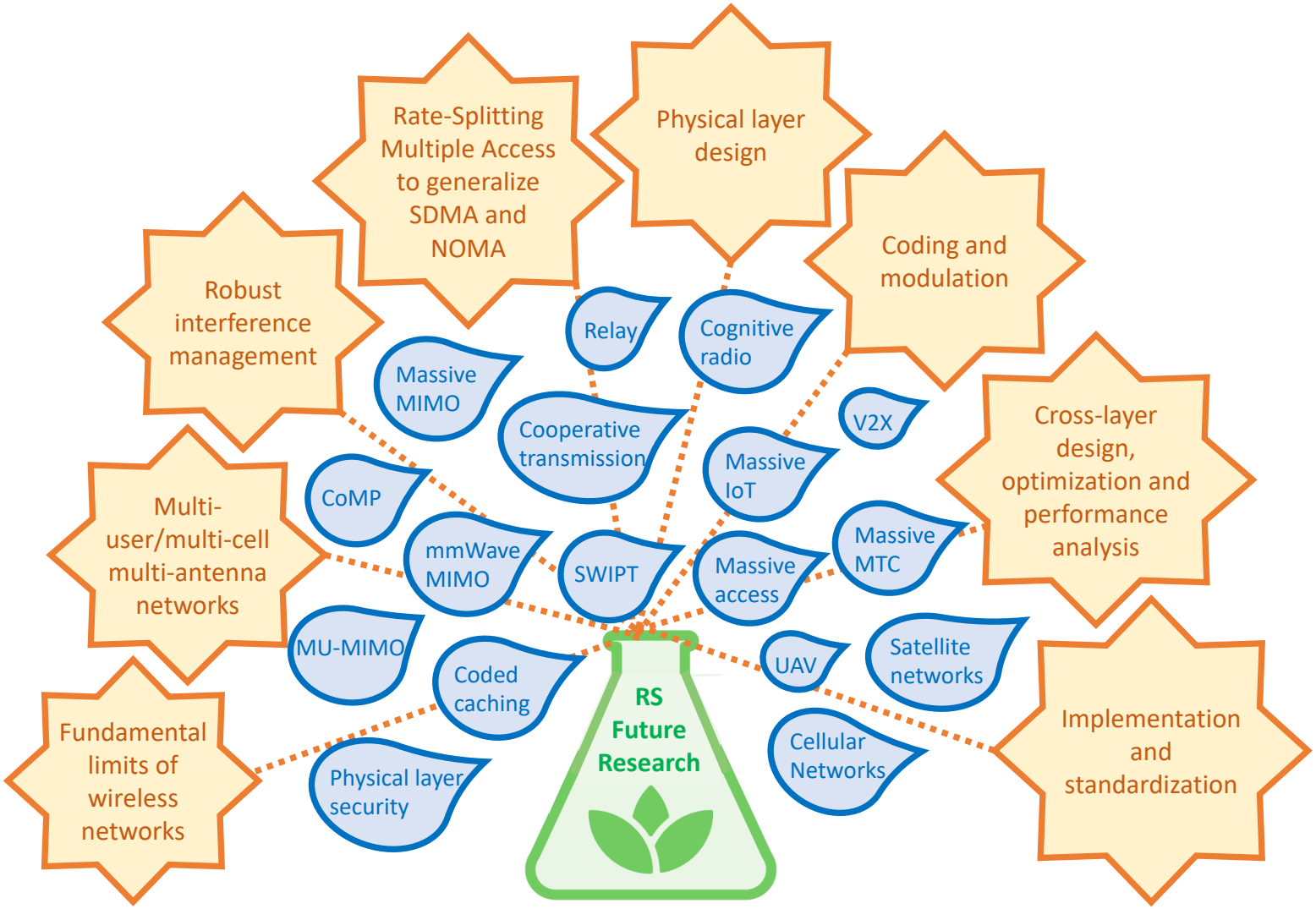

Pathways to 3GPP B5G/6G

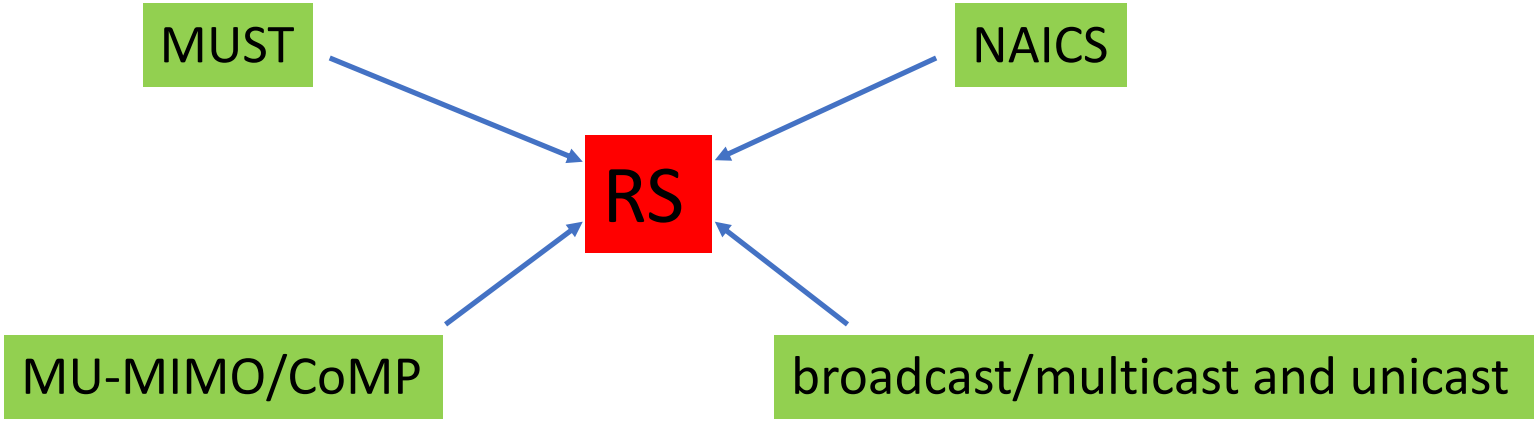

- RS can leverage 5G study/work items
- Missing piece: message split at the transmitter
- Applications to 6G in enhanced eMBB, URLLC, mMTC, and new services (joint sensing/radar and communications, wireless information and power transfer, integrated cellular and satellite communications, ...)

Two upcoming RSMA Workshops

- IEEE WCNC 2021 Workshop on Rate-Splitting (Multiple Access) for Beyond 5G

  https://wcnc2021.ieee-wcnc.org

  (29 March - 1 April 2021 // Nanjing, China)

- IEEE ICC 2021 Workshop on Rate-Splitting (Multiple Access) for 6G

  https://icc2021.ieee-icc.org

  (14 - 18 June 2021 // Montreal, Canada)

A Non-Exhaustive List of References

RS for 2-user interference channel: T. Han and K. Kobayashi, *A new achievable rate region for the interference channel*, IEEE Trans. Inf. Theory, vol. 27, no. 1, pp. 49–60, Jan. 1981.
RS for 2-user interference channel: R. H. Etkin, D. N. C. Tse, and H. Wang, *Gaussian interference channel capacity to within one bit*, IEEE Trans. Inf. Theory, vol. 54, no. 12, pp. 5534–5562, Dec 2008.
RS with quantized feedback: C. Hao, Y. Wu and B. Clerckx, *Rate analysis of two-receiver MISO broadcast channel with finite rate feedback: A rate-splitting approach*, IEEE Trans. on Comm., vol. 63, no. 9, pp. 3232-3246, Sept. 2015.
Overview of RS: B. Clerckx, H. Joudeh, C. Hao, M. Dai and B. Rassouli, *Rate Splitting for MIMO Wireless Networks: A Promising PHY-Layer Strategy for LTE Evolution*, IEEE Communications Magazine, pp 98-105, May 2016.
RS in Massive MIMO: M. Dai, B. Clerckx, D. Gesbert and G. Caire, *A Rate Splitting Strategy for Massive MIMO with Imperfect CSIT*, IEEE Trans. on Wireless Comm., vol. 15, no. 7, pp. 4611-4624, July 2016.
Sum-rate optimization of RS in multi-user multi-antenna transmission: H. Joudeh and B. Clerckx, *Sum-Rate Maximization for Linearly Precoded Downlink Multiuser MISO Systems with Partial CSIT: A Rate-Splitting Approach*, IEEE Trans. on Comm., vol. 64, no. 11, pp. 4847-4861, Nov 2016.
Robust optimization of RS in multi-user multi-antenna transmission: H. Joudeh and B. Clerckx, *Robust Transmission in Downlink Multiuser MISO Systems: A Rate-Splitting Approach*, IEEE Trans. on Sig Proc, Vol. 64, No. 23, pp. 6227-6242 , Dec 2016.
RS in multigroup multicast: H. Joudeh and B. Clerckx, *Rate-Splitting for Max-Min Fair Multigroup Multicast Beamforming in Overloaded Systems*, IEEE Trans. on Wireless Commun., vol 16, no 11, pp 7276-7289, Nov 2017.
RS in overloaded transmission: E. Piovano, H. Joudeh and B. Clerckx, *Overloaded MU-MISO Transmission with Imperfect CSIT*, 2016 Asilomar Conference on Signals, Systems, and Computers.
RS in multi-antenna wireless networks: C. Hao and B. Clerckx, *MISO Networks with Imperfect CSIT: A Topological Rate Splitting Approach*, IEEE Trans. on Comm., Vol 65, No 5, pp. 2164-2179, May 2017.
RS in MIMO networks with multiple antennas at the receivers: C. Hao, B. Rassouli and B. Clerckx, *Achievable DoF Regions of MIMO Networks with Imperfect CSIT*, IEEE Trans. on Info Theory, vol. 63, no. 10, pp. 6587-6606, Oct 2017.
RS for millimeter communications: M. Dai and B. Clerckx, *Multiuser Millimeter Wave Beamforming Strategies with Quantized and Statistical CSIT*, IEEE Trans. on Wireless Comm., vol 16, no 11, pp 7025-7038, Nov 2017.
2-user DoF of RS: S. Yang, M. Kobayashi, D. Gesbert, and X. Yi, *Degrees of freedom of time correlated MISO broadcast channel with delayed CSIT*, IEEE Trans. Inf. Theory, vol. 59, no. 1, pp. 315-328, Jan. 2013.
DoF outer-bound: A.G. Davoodi, S.A. Jafar, *Aligned image sets under channel uncertainty: Settling conjectures on the collapse of degrees of freedom under finite precision CSIT*, IEEE Trans. Inf. Theory, vol. 62, no. 10, pp. 5603–5618, Oct 2016.

A Non-Exhaustive List of References

GDoF outer-bound: A.G. Davoodi, S.A. Jafar, *Transmitter cooperation under finite precision CSIT: A GDoF perspective*, IEEE Trans. Inf. Theory, vol. 63, no. 9, pp. 6020–6030, Sept. 2017.
RS for uplink: B. Rimoldi and R. Urbanke, *A rate-splitting approach to the Gaussian multiple-access channel*, IEEE Trans. Inf. Theory, vol. 42, no. 2, pp. 364–375, Mar 1996.
Optimality (DoF region) of RS: E. Piovano and B. Clerckx, *Optimal DoF region of the K-User MISO BC with Partial CSIT*, IEEE Commun. Letters, vol 21, no 11, pp 2368-2371, Nov 2017.
RS to mitigate phase noise and hardware impairments: A. Papazafeiropoulos, B. Clerckx, and T. Ratnarajah, *Rate-Splitting to Mitigate Residual Transceiver Hardware Impairments in Massive MIMO Systems*, IEEE Trans. on Veh. Tech., vol 66, no 9, pp 8196-8211, Sept 2017.
RSMA as a more general and powerful strategy than NOMA and SDMA: Y. Mao, B. Clerckx and V.O.K. Li, *Rate-Splitting Multiple Access for Downlink Communication Systems: Bridging, Generalizing and Outperforming SDMA and NOMA*, EURASIP Journal on Wireless Communications and Networking, 2018.
Energy efficiency of RSMA: Y. Mao, B. Clerckx and V.O.K. Li, *Energy Efficiency of Rate-Splitting Multiple Access, and Performance Benefits over SDMA and NOMA*, IEEE ISWCS 2018.
RS with nonlinear precoding: Andre R. Flores, Bruno Clerckx and Rodrigo C. de Lamare, *Tomlinson-Harashima Precoded Rate-Splitting for Multiuser Multiple-Antenna Systems*, IEEE ISWCS 2018.
RSMA in Network MIMO: Y. Mao, B. Clerckx and V.O.K. Li, *Rate-Splitting Multiple Access for Coordinated Multi-Point Joint Transmission*, IEEE ICC 2019
RS for unicast and multicast transmission: Y. Mao, B. Clerckx and V.O.K. Li, *Rate-Splitting for Multi-Antenna Non-Orthogonal Unicast and Multicast Transmission: Spectral and Energy Efficiency Analysis*, IEEE Trans. on Commun., vol 67, no 12, pp. 8754-8770, Dec 2019.
RS for SWIPT: Y. Mao, B. Clerckx, V.O.K. Li, *Rate-Splitting for Multi-User Multi-Antenna Wireless Information and Power Transfer*, IEEE SPAWC 2019
RS rate analysis and unifying various multiple access: B. Clerckx, Y. Mao, R. Schober, and H. V. Poor, *Rate-Splitting Unifying SDMA, OMA, NOMA, and Multicasting in MISO Broadcast Channel: A Simple Two-User Rate Analysis*, accepted to IEEE Wireless Communications Letters
Cooperative RS for user relaying: J. Zhang, B. Clerckx, J. Ge, and Y. Mao, *Cooperative Rate-Splitting for MISO Broadcast Channel with User Relaying*, IEEE Signal Processing Letters, vol. 26, no. 11, pp. 1678-1682, Nov 2019.

A Non-Exhaustive List of References

Alternative proof of optimality (DoF region) of RS: H. Joudeh and B. Clerckx, *DoF Region of the MISO BC with Partial CSIT: Proof by Inductive Fourier-Motzkin Elimination*, IEEE SPAWC 2019.
RS with finite constellations: A. Salem, C. Masouros, and B. Clerckx, *Rate Splitting with Finite Constellations: The Benefits of Interference Exploitation vs Suppression*, https://arxiv.org/abs/1907.08457
RS in multicell multgroup multicast: O. Tervo, L. Trant, S. Chatzinotas, B. Ottersten, and M. Juntti, *Multigroup multicast beamforming and antenna selection with rate-splitting in multicell systems*, in Proc. IEEE Int. Workshop Signal Process. Adv. Wireless Commun. (SPAWC), June 2018, pp. 1–5.
Robust optimization of RS: M. Medra and T. N. Davidson, *Robust downlink transmission: An offset-based single-rate-splitting approach*, in Proc. IEEE Int. Workshop Signal Process. Adv. Wireless Commun. (SPAWC), June 2018, pp. 1–5.
RS in massive MIMO relay systems: A. Papazafeiropoulos and T. Ratnarajah, *Rate-splitting robustness in multi-pair massive MIMO relay systems*, IEEE Trans. Wireless Commun., vol. 17, no. 8, pp. 5623–5636, Aug 2018.
Parallel channel with partial CSIT: H. Joudeh and B. Clerckx, *On the Separability of Parallel MISO Broadcast Channels Under Partial CSIT: A Degrees of Freedom Region Perspective*, IEEE Trans. on Inf. Theory in press.
RS in coded caching: E. Piovano, H. Joudeh, and B. Clerckx, *Generalized Degrees of Freedom of the Symmetric Cache-Aided MISO Broadcast Channel with Partial CSIT*, IEEE Trans. on Inf. Theory, vol. 65, no. 9, pp. 5799-5815, Sept 2019.
RS and DPC: Y. Mao and B. Clerckx, *Beyond Dirty Paper Coding for Multi-Antenna Broadcast Channel with Partial CSIT: A Rate-Splitting Approach*, accepted to IEEE Trans. on Commun.
RS in multigroup multicast with common message: A.Z. Yalcin, M. Yuksel, and B. Clerckx, *Rate Splitting for Multi-group Multicasting with a Common Message*, IEEE Trans Veh. Techn., vol. 69, no. 10, pp 12281-12285, Oct 2020.
RS in multicarrier multigroup multicast: H. Chen, D. Mi, B. Clerckx, Z. Chu, J. Shi and P. Xiao, *Joint Power and Subcarrier Allocation Optimization for Multigroup Multicast Systems with Rate Splitting*, IEEE Trans Veh. Techn.
Cooperative RS for K-user: Y. Mao, B. Clerckx, J. Zhang, V.O.K. Li, and M. Arafah, *Max-min Fairness of K-user Cooperative Rate-Splitting in MISO Broadcast Channel with User Relaying*, accepted to IEEE Trans. on Wireless Commun.
EE-SE tradeoff of RS: G. Zhou, Y. Mao, and B. Clerckx, *Rate-Splitting Multiple Access for Multi-Antenna Downlink Communication Systems: Spectral and Energy Efficiency Tradeoff*, https://arxiv.org/abs/2001.03206
RS with multi-antenna receivers: A. R. Flores, R. C. de Lamare, and B. Clerckx, *Linear Precoding and Stream Combining for Rate Splitting in Multiuser MIMO Systems*, IEEE Communications Letters, in press.
RS for comms-radar: C. Xu, B. Clerckx, S. Chen, Y. Mao, J. Zhang, *Rate-Splitting Multiple Access for Multi-Antenna Joint Communication and Radar Transmissions*, IEEE ICC 2020, https://arxiv.org/abs/2002.00407.

A Non-Exhaustive List of References

RS for satellite communications: L. Yin, B. Clerckx, *Rate-Splitting Multiple Access for Multibeam Satellite Communications*, IEEE ICC 2020.
RS for satellite communications: L. Yin and B. Clerckx, *Rate-Splitting Multiple Access for Multigroup Multicast and Multibeam Satellite Systems*, accepted to IEEE Trans. on Commun.
RS for satellite communications: M. Caus, A. Pastore, M. Navarro, T. Ramirez, C. Mosquera, N. Noels, N. Alagha, and A. I. Perez-Neira, *Exploratory analysis of superposition coding and rate splitting for multibeam satellite systems*, in Proc. IEEE Int. Symp. Wireless Commun. Syst. (ISWCS), Aug 2018.
Rate-splitting for TDD Massive MIMO: C.K. Thomas, B. Clerckx, L. Sanguinetti, D. Slock, *A Rate Splitting Strategy for Mitigating Intra-Cell Pilot Contamination in Massive MIMO*, IEEE ICC 2020.
RS in cognitive radio: A. Zappone, B. Matthiesen, E. Jorswieck, *Energy Efficiency in MIMO Underlay and Overlay Device-to-Device Communications and Cognitive Radio Systems*, IEEE Trans. on Signal Process., 2016.
RS for 6G: O. Dizdar, Y. Mao, W. Han, and B. Clerckx, *Rate-Splitting Multiple Access: A new frontier for the PHY layer of 6G*, IEEE VTC 2020.
PHY Layer design and LLS of RS: O. Dizdar, Y. Mao, W. Han, and B. Clerckx, *Rate-Splitting Multiple Access for Downlink Multi-Antenna Communications: Physical Layer Design and Link-level Simulations*, IEEE PIMRC 2020.
RS in C-RAN: A. Alameer Ahmad, H. Dahrouj, A. Chaaban, A. Sezgin, and M. Alouini, *Interference mitigation via rate-splitting and common message decoding in cloud radio access networks*, IEEE Access, vol. 7, pp. 80 350– 80 365, 2019.
RS in C-RAN: D. Yu, J. Kim, and S. Park, *An efficient rate-splitting multiple access scheme for the downlink of C-RAN systems*, IEEE Wireless Commun. Lett., vol. 8, no. 6, pp. 1555–1558, Dec 2019.
RS in C-RAN A. A. Ahmad, Y. Mao, A. Sezgin, and B. Clerckx, *Rate Splitting Multiple Access in C-RAN: A Scalable and Robust Design*, arXiv:2011.00076.
Optimality of RS: Z. Li and S. Yang, *A linearly precoded rate splitting approach and its optimality for MIMO broadcast channels*, in Proc. IEEE Inform. Theory Workshop (ITW), 2018.
RS precoder design: Z. Li, C. Ye, Y. Cui, S. Yang, and S. Shamai, *Rate splitting for multi-antenna downlink: Precoder design and practical implementation*, arXiv preprint arXiv:2002.07225, 2020.
RS with quantized feedback: G. Lu, L. Li, H. Tian, and F. Qian, *MMSE-based precoding for rate splitting systems with finite feedback*, IEEE Commun. Lett., vol. 22, no. 3, pp. 642–645, March 2018.
Secrecy of RS: P. Li, M. Chen, Y. Mao, Z. Yang, B. Clerckx, and M. Shikh-Bahaei, *Cooperative Rate-Splitting for Secrecy Sum-Rate Enhancement in Multi-antenna Broadcast Channels*, IEEE PIMRC 2020.
RS for overloaded/massive IoT Y. Mao, E. Piovano, and B. Clerckx, *Rate-Splitting Multiple Access for Overloaded Cellular Internet of Things*, arXiv:2008.01238.